Servomech®

new ideas in linear motion

# LINEAR ACTUATORS HSA SERIES

CATALOGUE

**Servomech HSA electromechanical linear actuators** are high performance products with high precision ball screw drive, 100% internal production made by Servomech. The main advantages they offer are: high linear speeds associated with high loads always under a constant position control; precise and accurate control of position, speed and force; high efficiency with low energy consumption; reduced installation costs.

Ideal for **replacing hydraulic cylinders** in applications that require high linear speeds associated with high loads, precise and accurate control of position, speed and force, reduced energy consumption and lower installation costs.

Due to their construction and performance characteristics, these products fall within the range of **high-performance Servomech electromechanical cylinders**.

The high performance Servomech electromechanical cylinders best combine the demands of ever higher performance and **higher productivity** of plants with competitive industrial costs. They are available in various mounting configurations for full interchangeability even with existing hydraulic cylinders. The **field of use** are extremely varied but always attributable to applications that seek the highest levels of automation, productivity, efficiency and reliability.

In the design and construction of this range of linear actuators, **Servomech** takes advantage of its knowledge deriving from **thirty years of experience** in the field of electromechanical actuators, ball screws and application experience. The result is an innovative product, with distinctive characteristics and performance compared to other products on the market.


**Five reasons** to prefer Servomech electromechanical cylinders to traditional hydraulic and pneumatic cylinders. Find out more at **www.servomech.com**

1. GREATER ENERGY EFFICIENCY WITH REDUCED ENERGY CONSUMPTION
2. GREATER CONTROL: POSITION - SPEED - FORCE
3. POSITIONING ACCURACY AND REPEATABILITY
4. GREATER SAFETY AND RELIABILITY
5. EASIER INSTALLATION AND LOWER MAINTENANCE COSTS

SERVOMECH products are **designed and manufactured inside our production factory in Anzola dell'Emilia (Bologna) - ITALY** using high technology and CNC machine tools.
All working processes inside SERVOMECH comply to its **Quality Management System**, developed according to **ISO 9001:2015** and certified by TÜV Italia. Check tests are carried out in-line during all manufacturing processes to monitor and adjust possible errors, obtaining a constant quality of the production with target zero scraps. Final control and functional checks are carried out to ensure high quality and reliability of the final product.
Each finished product is uniquely identified by the serial number on the product identification nameplate. For each finished product, SERVOMECH fills a specific final test sheet which is supplied to the customer within the shipment together with the product and certifies its conformity. The final test sheet also contains important information for the correct functioning of the product.
For more information, visit our website **www.servomech.com** or contact our sales office.

## / Product overview

The range of **high performance Servomech electromechanical linear actuators** is made upon **3 series**, differentiated by design and input drive.

### HSA Series

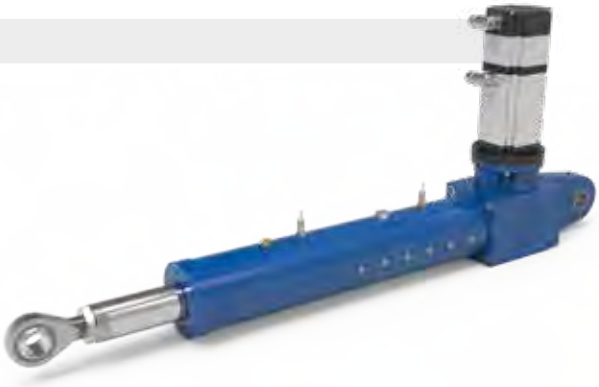

#### High-speed linear actuators

- Rear hinged attachments
- ***Gleason*** bevel gear
- Ball screw drive
- 6 sizes, load capacity from 5 kN to 150 kN
- Ball screw from Ø 25 mm to Ø 80 mm
- Integrated anti-turn device system
- Lubrication with synthetic grease, lifelong lubricated gearbox
- Fast and easy re-lubrication system of the ball nut with “homing” position
- Linear speed up to ***1 500 mm/s***
- Standard stroke length up to 1 000 mm
- Proximity limit switches
- Incremental or absolute encoder for positioning control
- Prepared for IEC standard AC motors and brushless servomotors

### ATL and BSA Series

#### Right angle design linear actuators

- Rear hinged attachments
- High precision worm gearbox, ZI involute profile
- Acme screw drive (ATL Series)
  and ball screw drive (BSA Series)
- Lubrication with synthetic grease
  lifelong lubricated gearbox, screw drive regreasable
- Standard stroke length up to 1 000 mm
- Proximity limit switches
- Incremental or absolute encoder for positioning control
- Prepared for IEC standard AC motors

### ILA Series

#### In-line modular design linear actuators

- Housing mounting with pins
- In-line or right angle gearbox mounting
- Acme screw drive and ball screw drive
- Lubrication with synthetic grease
  lifelong lubricated gearbox, screw drive regreasable
- Standard stroke length up to 1.500 mm
- Proximity limit switches
- Incremental or absolute encoder for positioning control
- Prepared for IEC standard AC motors and brushless servomotors

## / Size overview

The electromechanical linear actuators HSA Series is available in **6 standard sizes**, to cover a wide range of performances.

| SIZE | Push rod diameter [mm] | Outer tube diameter [mm] | Ball screw $d_0$ × Ph [mm] |
|---|---|---|---|
| **HSA 10** | Ø **35** | Ø **20** | 25 × 5 |
| | | | 25 × 10 |
| | | | 25 × 25 |
| **HSA 25** | Ø **50** | Ø **22** | 32 × 5 |
| | | | 32 × 10 |
| | | | 32 × 20 |
| | | | 32 × 32 |
| **HSA 50** | Ø **60** | Ø **25** | 40 × 5 |
| | | | 40 × 10 |
| | | | 40 × 20 |
| | | | 40 x 40 |
| **HSA 100** | Ø **80** | Ø **30** | 50 × 10 |
| | | | 50 × 20 |
| | | | 50 × 40 |
| **HSA 150** | Ø **90** | Ø **35** | 63 × 10 |
| | | | 63 × 20 |
| | | | 63 × 30 |
| | | | 63 x 40 |
| **HSA 200** | Ø **115** | Ø **50** | 80 × 10 |
| | | | 80 × 16 |
| | | | 80 × 20 |
| | | | 80 × 40 |

**SERVOMECH innovative solutions for high speed and long service life**

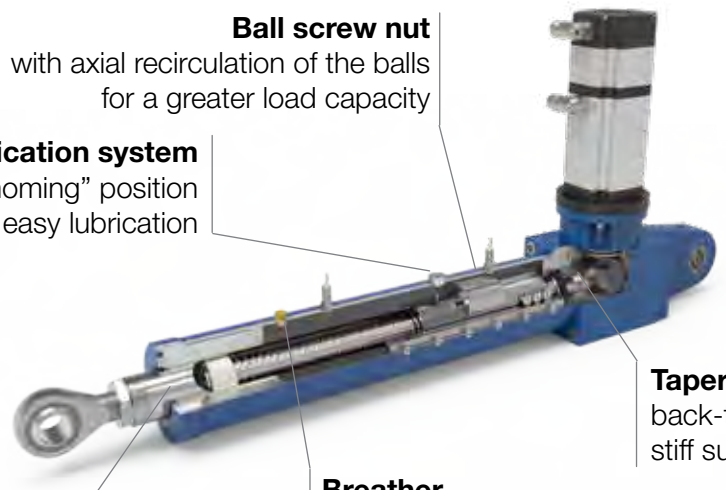

**Ball screw nut**
with axial recirculation of the balls for a greater load capacity

**Re-lubrication system**
of the nut with “homing” position for a fast and easy lubrication

**Tapered roller bearings**
back-to-back mounted for a stiff support of the ball screw

**Breather**
to compensate air flows and related pressure

**Pushrod guide**
with axial sliding bush in anti-friction material for high-speed use

# 2 / ACTUATORS HSA Series

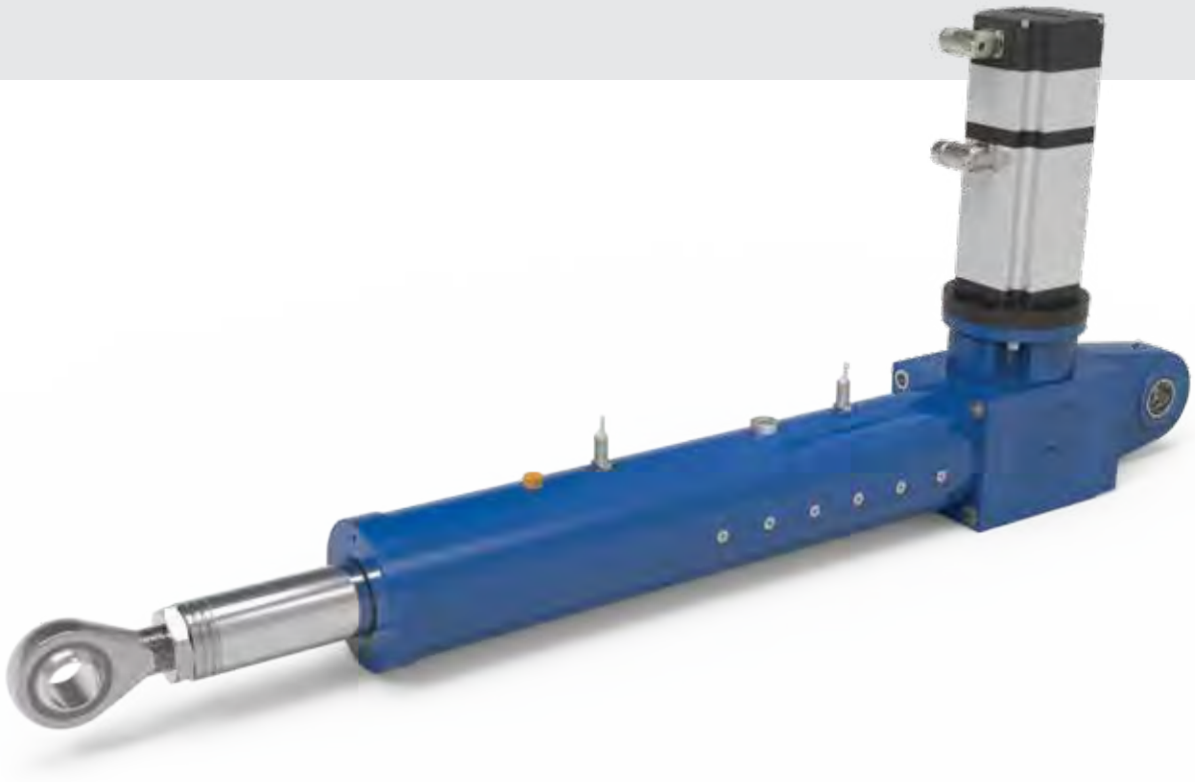

## 2.1 / Technical data **HSA** Series

| SIZE | | HSA 10 | | | HSA 25 | | | | HSA 50 | | | |
|---|---|---|---|---|---|---|---|---|---|---|---|---|
| Push rod diameter | [mm] | Ø35 | | | Ø50 | | | | Ø60 | | | |
| Outer tube diameter | [mm] | Ø90 | | | Ø105 | | | | Ø120 | | | |
| Front attachment diameter | [mm] | Ø20 | | | Ø30 | | | | Ø35 | | | |
| Rear attachment diameter | [mm] | Ø20 | | | Ø30 | | | | Ø35 | | | |
| Attachment for IEC standard motor (flange and hollow shaft) | | 71B5<br>80B5 - 80B14 | | | 80B5 - 80B14<br>90B5 - 90B14 | | | | 90B5<br>100-112B5<br>100-112B14 | | | |
| Max static load | [N] | 10 000 | | | 20 000 | | | | 40 000 | | | |
| Ball screw BS | | BS1 | BS2 | BS3 | BS1 | BS2 | BS3 | BS4 | BS1 | BS2 | BS3 | BS4 |
| Diameter × lead $d_0 \times P_h$ | [mm] | 25x5 | 25x10 | 25x25 | 32x5 | 32x10 | 32x20 | 32x32 | 40x5 | 40x10 | 40x20 | 40x40 |
| Ball diameter $D_w$ | [mm] | Ø3.175 | Ø3.969 | Ø3.175 | Ø3.175 | Ø6.350 | Ø6.350 | Ø6.350 | Ø3.175 | Ø6.350 | Ø6.350 | Ø6.350 |
| Accuracy grade (1) | | IT 7 | | | IT 7 | | | | IT 7 | | | |
| N° of circuits | | 4 | 3 | 2 | 6 | 4 | 3 | 2 | 6 | 4 | 3 | 2 |
| N° of starts | | 1 | 1 | 2 | 1 | 1 | 1 | 2 | 1 | 1 | 1 | 2 |
| Dynamic load $C_a$ | [N] | 14500 | 14800 | 13600 | 23000 | 37000 | 29800 | 35000 | 25300 | 42800 | 34300 | 40300 |
| Static load $C_{0a}$ | [N] | 31500 | 28000 | 27300 | 60200 | 66800 | 53200 | 58100 | 76900 | 88000 | 70000 | 77100 |
| Ratio $u$ | R1 | 1 | | | 1 | | | | 1 | | | |
| Linear travel for 1 motor shaft rev. | [mm] | 5 | 10 | 25 | 5 | 10 | 20 | 32 | 5 | 10 | 20 | 40 |
| Max. force $F_{max}$ | [N] | 10000 | 8007 | 3313 | 20000 | 20000 | 18670 | 11800 | 40000 | 40000 | 40000 | 20589 |
| Max. input torque $T_{max}$ | [Nm] | 10.9 | 16.5 | 16.5 | 22.4 | 41.3 | 73.3 | 73.3 | 44.2 | 82.1 | 158.1 | 159.1 |
| Max. linear speed $v_{max}$ | [mm/s] | 250 | 500 | 1250 | 233 | 466 | 933 | 1493 | 188 | 375 | 750 | 1500 |
| Max. rotational speed $n_{max}$ | [rpm] | 3000 | 3000 | 3000 | 2800 | 2800 | 2800 | 2800 | 2250 | 2250 | 2250 | 2250 |
| Ratio $u$ | R1.5 | 1.5 | | | 1.5 | | | | 1.5 | | | |
| Linear travel for 1 motor shaft rev. | [mm] | 3.33 | 6.67 | 16.67 | 3.33 | 6.67 | 13.33 | 21.33 | 3.33 | 6.67 | 13.33 | 26.67 |
| Max. force $F_{max}$ | [N] | 10000 | 8884 | 3676 | 20000 | 20000 | 18176 | 11488 | 40000 | 40000 | 40000 | 20471 |
| Max. input torque $T_{max}$ | [Nm] | 7.5 | 12.4 | 12.4 | 15.4 | 28.0 | 48.1 | 48.1 | 30.3 | 55.6 | 106.2 | 106.3 |
| Max. linear speed $v_{max}$ | [mm/s] | 167 | 333 | 833 | 156 | 311 | 622 | 996 | 125 | 250 | 500 | 1000 |
| Max. rotational speed $n_{max}$ | [rpm] | 3000 | 3000 | 3000 | 3000 | 3000 | 3000 | 3000 | 3000 | 3000 | 3000 | 3000 |
| Ratio $u$ | R2 | 2 | | | 2 | | | | 2 | | | |
| Linear travel for 1 motor shaft rev. | [mm] | 2.5 | 5 | 12.5 | 2.5 | 5 | 10 | 16 | 2.5 | 5 | 10 | 20 |
| Max. force $F_{max}$ | [N] | 10000 | 9710 | 4018 | 20000 | 20000 | 19242 | 12161 | 40000 | 40000 | 37024 | 18932 |
| Max. input torque $T_{max}$ | [Nm] | 5.8 | 10.3 | 10.3 | 11.9 | 21.4 | 38.5 | 38.5 | 23.4 | 42.3 | 74.5 | 74.5 |
| Max. linear speed $v_{max}$ | [mm/s] | 125 | 250 | 625 | 117 | 233 | 467 | 747 | 94 | 188 | 375 | 750 |
| Max. rotational speed $n_{max}$ | [rpm] | 3000 | 3000 | 3000 | 3000 | 3000 | 3000 | 3000 | 3000 | 3000 | 3000 | 3000 |
| Ratio $u$ | R3 | 3 | | | 3 | | | | 3 | | | |
| Linear travel for 1 motor shaft rev. | [mm] | 1.67 | 3.33 | 8.33 | 1.67 | 3.33 | 6.67 | 10.67 | 1.67 | 3.33 | 6.67 | 13.33 |
| Max. force $F_{max}$ | [N] | 10000 | 9349 | 3869 | 20000 | 20000 | 13574 | 8579 | 40000 | 40000 | 23371 | 11951 |
| Max. input torque $T_{max}$ | [Nm] | 4.1 | 6.9 | 6.9 | 8.5 | 14.8 | 18.9 | 18.9 | 16.4 | 29.0 | 32.8 | 32.8 |
| Max. linear speed $v_{max}$ | [mm/s] | 83 | 167 | 417 | 78 | 156 | 311 | 498 | 63 | 125 | 250 | 500 |
| Max. rotational speed $n_{max}$ | [rpm] | 3000 | 3000 | 3000 | 3000 | 3000 | 3000 | 3000 | 3000 | 3000 | 3000 | 3000 |
| Ratio $u$ | R4 | 4 | | | 4 | | | | 4 | | | |
| Linear travel for 1 motor shaft rev. | [mm] | 1.25 | 2.5 | 6.25 | 1.25 | 2.5 | 5 | 8 | 1.25 | 2.5 | 5 | 10 |
| Max. force $F_{max}$ | [N] | 10000 | 8968 | 3711 | 20000 | 17689 | 9153 | 5785 | 40000 | 30956 | 15838 | 8099 |
| Max. input torque $T_{max}$ | [Nm] | 3.3 | 5.2 | 5.2 | 6.7 | 10.3 | 10.3 | 10.3 | 12.9 | 17.9 | 17.9 | 17.9 |
| Max. linear speed $v_{max}$ | [mm/s] | 62 | 125 | 313 | 58 | 117 | 233 | 373 | 47 | 94 | 188 | 375 |
| Max. rotational speed $n_{max}$ | [rpm] | 3000 | 3000 | 3000 | 3000 | 3000 | 3000 | 3000 | 3000 | 3000 | 3000 | 3000 |
| Total actuator efficiency $\eta$ | | 0.78 | 0.81 | 0.84 | 0.76 | 0.80 | 0.83 | 0.84 | 0.76 | 0.80 | 0.82 | 0.84 |
| Friction torque $T_a$ (3) | [Nm] | 0.75 (1.1) | | | 1.5 (2.2) | | | | 2.5 (3.7) | | | |
| Weight of 100 mm stroke actuator (2) | [kg] | 18 | | | 36 | | | | 54 | | | |
| Weight for each 100 mm extra-stroke | [kg] | 1.8 | | | 2.5 | | | | 3.2 | | | |

***(1)*** *- Ball screws with accuracy grade IT 3 or IT 5 available on demand*
***(2)*** *- Weight of the actuator without fixing accessories*
***(3)*** *- The value in brackets refers to the version with additional output shaft (see chap. 3.4)*

| SIZE | | HSA 100 | | | HSA 150 | | | | HSA 200 | | | |
|---|---|---|---|---|---|---|---|---|---|---|---|---|
| Push rod diameter | [mm] | Ø80 | | | Ø90 | | | | Ø115 | | | |
| Outer tube diameter | [mm] | Ø155 | | | Ø195 | | | | Ø244.5 | | | |
| Front attachment diameter | [mm] | Ø40 | | | Ø45 | | | | Ø60 | | | |
| Rear attachment diameter | [mm] | Ø40 | | | Ø45 | | | | Ø60 | | | |
| Attachment for IEC standard motor (flange and hollow shaft) | | 90B5<br>110-112B5<br>100-112B14 | | | 100-112B5<br>132B5 - 132B14 | | | | 132B5<br>160B5 | | | |
| Max static load | [N] | 60 000 | | | 100 000 | | | | 150 000 | | | |
| Ball screw BS | | BS1 | BS2 | BS3 | BS1 | BS2 | BS3 | BS4 | BS1 | BS2 | BS3 | BS4 |
| Diameter × lead $d_0 \times P_h$ | [mm] | 50X10 | 50X20 | 50X40 | 63X10 | 63X20 | 63X30 | 63X40 | 80x10 | 80x16 | 80x20 | 80x40 |
| Ball diameter $D_w$ | [mm] | Ø7.144 | Ø7.144 | Ø7.144 | Ø7.144 | Ø9.525 | Ø9.525 | Ø9.525 | Ø7.144 | Ø9.525 | Ø12.7 | Ø12.7 |
| Accuracy grade (1) | | IT7 | | IT5 | IT5 | | | | IT5 | | | |
| N° of circuits | | 5 | 4 | 2 | 6 | 4 | 3 | 2 | 6 | 5 | 4 | 2 |
| N° of starts | | 1 | 1 | 1 | 1 | 1 | 1 | 1 | 1 | 1 | 1 | 1 |
| Dynamic load $C_a$ | [N] | 69900 | 57300 | 32900 | 102900 | 101100 | 80900 | 54500 | 115900 | 141000 | 192400 | 104700 |
| Static load $C_{0a}$ | [N] | 166100 | 132100 | 68100 | 291300 | 234800 | 183600 | 115000 | 384500 | 395000 | 488100 | 241800 |
| Ratio $u$ | R1 | 1 | | | 1 | | | | 1 | | | |
| Linear travel for 1 motor shaft rev. | [mm] | 10 | 20 | 40 | 10 | 20 | 30 | 40 | 10 | 16 | 20 | 40 |
| Max. force $F_{max}$ | [N] | 60000 | 60000 | 32001 | 100000 | 100000 | 86011 | 65241 | 150000 | 150000 | 150000 | 117858 |
| Max. input torque $T_{max}$ | [Nm] | 125.2 | 239.0 | 246.4 | 212.5 | 401.8 | 505.6 | 505.6 | 326.2 | 494.3 | 602.3 | 911.8 |
| Max. linear speed $v_{max}$ | [mm/s] | 300 | 600 | 1200 | 238 | 475 | 713 | 950 | 188 | 300 | 375 | 750 |
| Max. rotational speed $n_{max}$ | [rpm] | 1800 | 1800 | 1800 | 1425 | 1425 | 1425 | 1425 | 1125 | 1125 | 1125 | 1125 |
| Ratio $u$ | R1.5 | 1.5 | | | 1.5 | | | | 1.5 | | | |
| Linear travel for 1 motor shaft rev. | [mm] | 6.67 | 13.33 | 26.67 | 6.67 | 13.33 | 20 | 26.67 | 6.67 | 10.67 | 13.33 | 26.67 |
| Max. force $F_{max}$ | [N] | 60000 | 58870 | 30450 | 100000 | 100000 | 84177 | 63850 | 150000 | 150000 | 150000 | 116896 |
| Max. input torque $T_{max}$ | [Nm] | 84.5 | 157.4 | 157.4 | 142.9 | 269.1 | 331.2 | 331.2 | 219.2 | 331.3 | 403.3 | 604.7 |
| Max. linear speed $v_{max}$ | [mm/s] | 200 | 400 | 800 | 158 | 317 | 475 | 633 | 125 | 200 | 250 | 500 |
| Max. rotational speed $n_{max}$ | [rpm] | 2700 | 2700 | 2700 | 2130 | 2130 | 2130 | 2130 | 1680 | 1680 | 1680 | 1680 |
| Ratio $u$ | R2 | 2 | | | 2 | | | | 2 | | | |
| Linear travel for 1 motor shaft rev. | [mm] | 5 | 10 | 20 | 5 | 10 | 15 | 20 | 5 | 8 | 10 | 20 |
| Max. force $F_{max}$ | [N] | 60000 | 58819 | 30423 | 100000 | 100000 | 79841 | 60561 | 150000 | 150000 | 150000 | 111917 |
| Max. input torque $T_{max}$ | [Nm] | 64.1 | 118.7 | 118.7 | 108.2 | 202.8 | 236.7 | 236.7 | 165.7 | 249.8 | 303.8 | 435.7 |
| Max. linear speed $v_{max}$ | [mm/s] | 150 | 300 | 600 | 119 | 238 | 356 | 475 | 94 | 150 | 188 | 375 |
| Max. rotational speed $n_{max}$ | [rpm] | 3000 | 3000 | 3000 | 2850 | 2850 | 2850 | 2850 | 2250 | 2250 | 2250 | 2250 |
| Ratio $u$ | R3 | 3 | | | 3 | | | | 3 | | | |
| Linear travel for 1 motor shaft rev. | [mm] | 3.33 | 6.67 | 13.33 | 3.33 | 6.67 | 10 | 13.33 | 3.33 | 5.33 | 6.67 | 13.33 |
| Max. force $F_{max}$ | [N] | 60000 | 46287 | 23942 | 100000 | 82540 | 56307 | 42710 | 150000 | 150000 | 150000 | 90412 |
| Max. input torque $T_{max}$ | [Nm] | 43.7 | 63.7 | 63.7 | 73.4 | 113.3 | 113.3 | 113.3 | 112.3 | 168.3 | 204.3 | 237.1 |
| Max. linear speed $v_{max}$ | [mm/s] | 100 | 200 | 400 | 79 | 158 | 238 | 317 | 63 | 100 | 125 | 250 |
| Max. rotational speed $n_{max}$ | [rpm] | 3000 | 3000 | 3000 | 3000 | 3000 | 3000 | 3000 | 3000 | 3000 | 3000 | 3000 |
| Ratio $u$ | R4 | 4 | | | 4 | | | | 4 | | | |
| Linear travel for 1 motor shaft rev. | [mm] | 2.5 | 5 | 10 | 2.5 | 5 | 7.5 | 10 | 2.5 | 4 | 5 | 10 |
| Max. force $F_{max}$ | [N] | 60000 | 33858 | 17513 | 100000 | 58293 | 39766 | 30163 | 150000 | 150000 | 129351 | 66932 |
| Max. input torque $T_{max}$ | [Nm] | 33.6 | 36.3 | 36.3 | 56.0 | 61.8 | 61.8 | 61.8 | 85.5 | 127.5 | 134.0 | 134.0 |
| Max. linear speed $v_{max}$ | [mm/s] | 75 | 150 | 300 | 59 | 119 | 178 | 238 | 47 | 75 | 94 | 188 |
| Max. rotational speed $n_{max}$ | [rpm] | 3000 | 3000 | 3000 | 3000 | 3000 | 3000 | 3000 | 3000 | 3000 | 3000 | 3000 |
| Total actuator efficiency $\eta$ | | 0.78 | 0.81 | 0.84 | 0.76 | 0.80 | 0.82 | 0.83 | 0.74 | 0.78 | 0.80 | 0.83 |
| Friction torque $T_a$ (3) | [Nm] | 3 (4.5) | | | 3.8 (5.7) | | | | 5.3 (7.9) | | | |
| Weight of 100 mm stroke actuator (2) | [kg] | 104 | | | 182 | | | | 328 | | | |
| Weight for each 100 mm extra-stroke | [kg] | 5.7 | | | 9.2 | | | | 14.2 | | | |

***(1) -*** *Ball screws with accuracy grade IT 3 or IT 5 available on demand*
***(2) -*** *Weight of the actuator without fixing accessories*
***(3) -*** *The value in brackets refers to the version with additional output shaft (see chap. 3.4)*

## 2.2 / Dimensions **HSA** Series

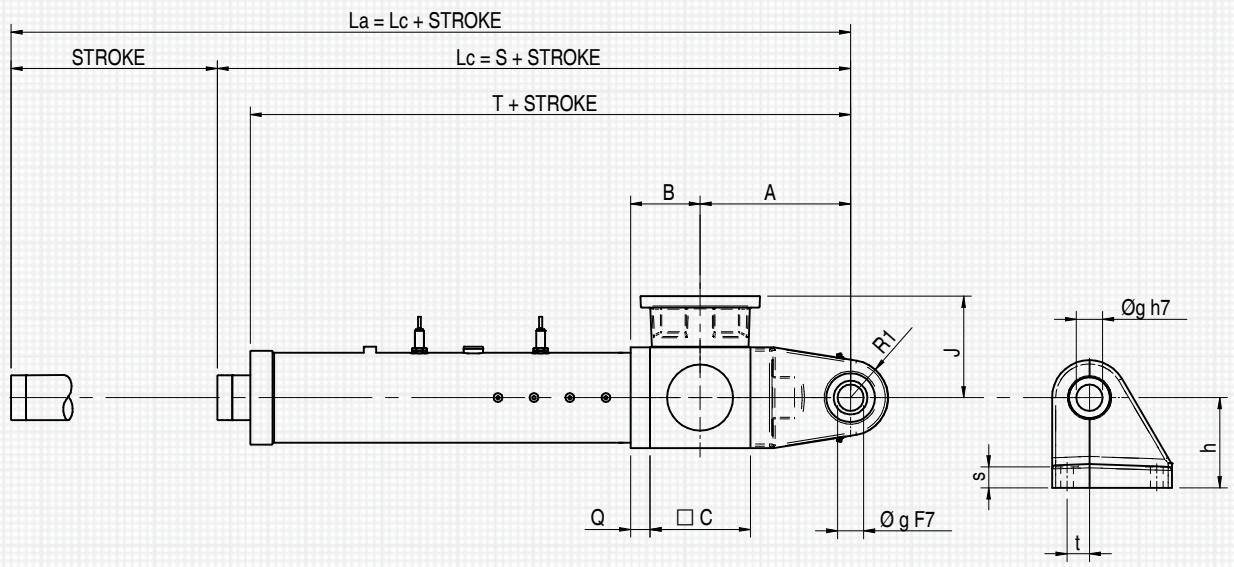


**Ordering code stroke:**

| C | 200 |
|---|---|
| | Stroke in mm |

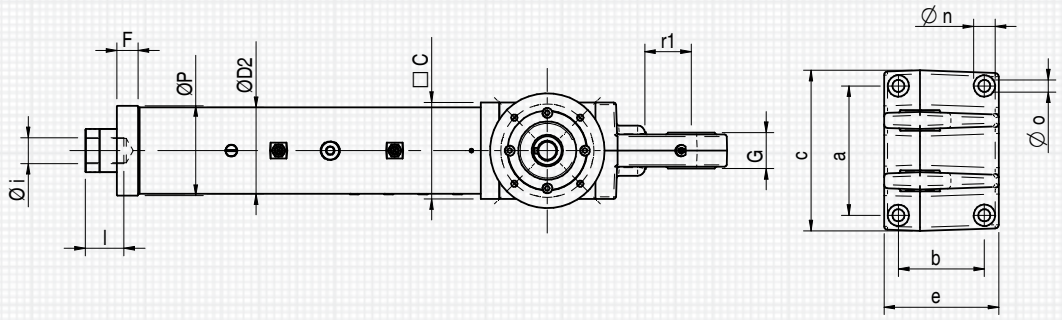


**STANDARD HEAD with threaded bore**
**Ordering code:** BA

**REAR BRACKET**
**Ordering code:** SP

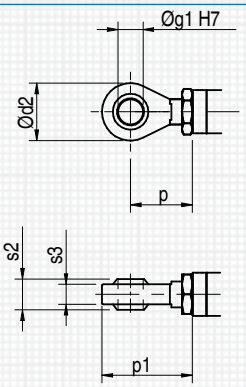


**BALL JOINT**
**Ordering code:** TS

| SIZE | HSA 10 | HSA 25 | HSA 50 | HSA 100 | HSA 150 | HSA 200 |
|---|---|---|---|---|---|---|
| BS | BS 25 x Ph | BS 32 x Ph | BS 40 x Ph | BS 50 x Ph | BS 63 x Ph | BS 80 x Ph |
| □ C | 86 | 110 | 134 | 166 | 200 | 250 |
| A | 127 | 164 | 201 | 231 | 271 | 310 |
| B | 61 | 77 | 93 | 115 | 146 | 169 |
| Ø D1 | 35 | 50 | 60 | 80 | 90 | 115 |
| Ø D2 | 90 | 105 | 120 | 155 | 195 | 244.5 |
| F | 25 | 30 | 30 | 35 | 35 | 43 |
| G | 24 | 40 | 50 | 60 | 70 | 90 |
| Ø P | 96 | 110 | 125 | 164 | 200 | 250 |
| Q | 18 | 22 | 26 | 32 | 46 | 44 |
| R1 | 28 | 45 | 50 | 60 | 70 | 80 |
| S | 500 | 629 | 746 | 776 | 867 | 1005 |
| T | 447 | 585 | 702 | 732 | 823 | 956 |
| Ø g | 20 | 30 | 35 | 40 | 45 | 60 |
| Ø g1 | 20 | 30 | 35 | 40 | 45 | 60 |
| r1 | 32 | 53 | 65 | 68 | 75 | 75 |
| Standard head **BA** | | | | | | |
| Ø i | M20x1.5 | M30x2 | M36x2 | M42x2 | M45x3 | M100x3 |
| l | 30 | 48 | 54 | 65 | 65 | 100 |
| Ball joint **TS** | | | | | | |
| Ø d2 | 50 | 70 | 80 | 90 | 102 | 135 |
| p | 50 | 65 | 86 | 85 | 98 | 135 |
| p1 | 75 | 100 | 126 | 130 | 149 | 202.5 |
| s2 | 25 | 37 | 43 | 49 | 32 | 44 |
| s3 | 18.5 | 25 | 28 | 33 | 27 | 38 |
| Rear bracket **SP** | | | | | | |
| a | 85 | 140 | 180 | 210 | - | - |
| b | 55 | 105 | 120 | 122 | - | - |
| c | 110 | 180 | 223.5 | 274.2 | - | - |
| e | 81 | 135 | 160 | 180 | - | - |
| h | 58 | 100 | 120 | 130 | - | - |
| Ø n | - | - | 30 | 36 | - | - |
| Ø o | 11 | 13 | 17 | 21 | - | - |
| s | 15 | 20 | 28 | 35 | - | - |
| t | 15 | 30 | 30 | 32 | - | - |

# 3 / Construction features

## 3.1 / Mounting attachments orientation

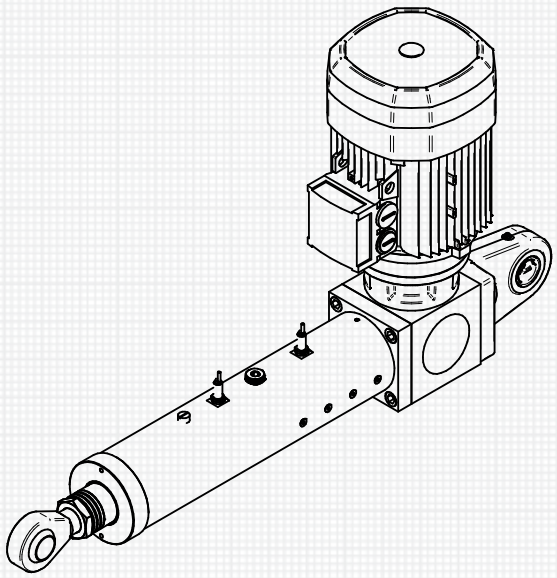

Ordering code: STD

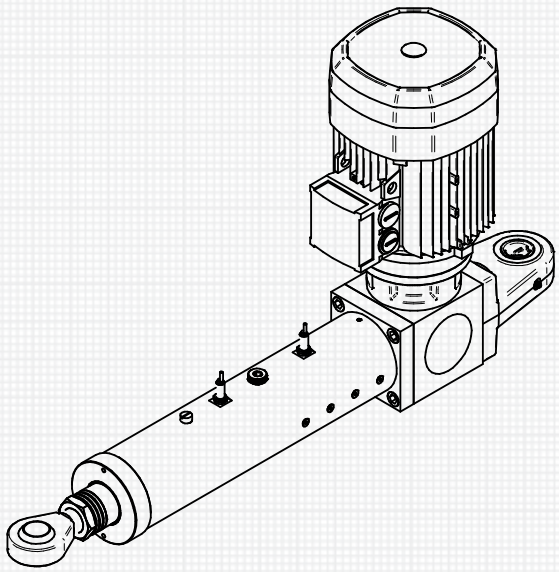

Ordering code: RPT

## 3.2 / Kinematic scheme

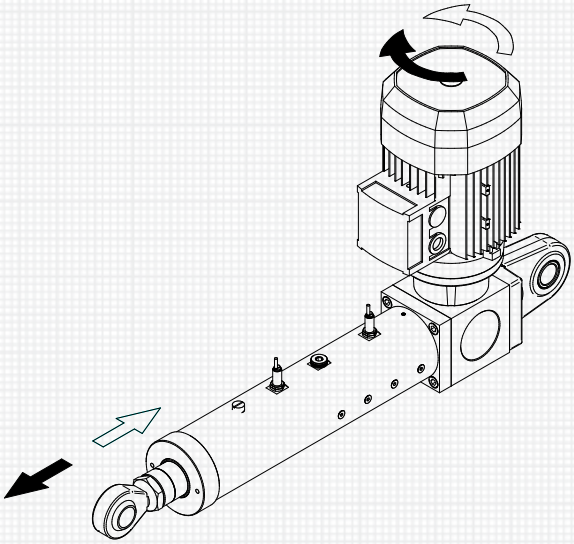

Ordering code: SCHEME 10

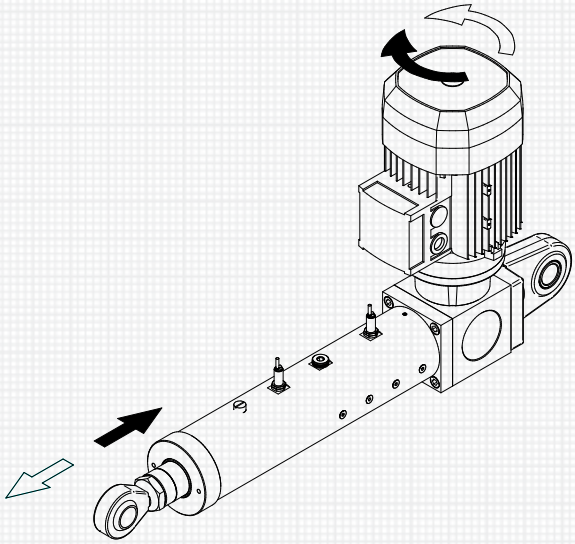

Ordering code: SCHEME 20

## 3.3 / Input shaft

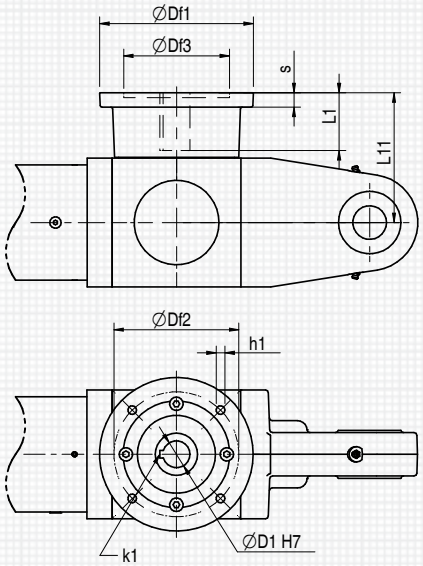


**Flange and hollow shaft for motor coupling**

**Ordering code:** MF (IEC_____)

| SIZE | Motor attachment IEC | ØD1 | ØDf1 | ØDf2 | ØDf3 | L1 | L11 | h1 | k1 | s |
|---|---|---|---|---|---|---|---|---|---|---|
| HSA 10 | IEC 71 B5 | 14 | 160 | 130 | 110 | 30 | 90 | M8 | 5 × 5 | 13 |
| | IEC 80 B5 | 19 | 200 | 165 | 130 | 40 | 100 | M10 | 6 × 6 | 13 |
| | IEC 80 B14 | 19 | 120 | 100 | 80 | 40 | 100 | Ø7 | 6 × 6 | 13 |
| HSA 25 | IEC 80 B5 | 19 | 200 | 165 | 130 | 40 | 105 | M10 | 6 × 6 | 13 |
| | IEC 80 B14 | 19 | 120 | 100 | 80 | 40 | 105 | Ø7 | 6 × 6 | 13 |
| | IEC 90 B5 | 24 | 200 | 165 | 130 | 50 | 115 | M10 | 8 × 7 | 13 |
| | IEC 90 B14 | 24 | 140 | 115 | 95 | 50 | 115 | Ø9 | 8 × 7 | 13 |
| HSA 50 | IEC 90 B5 | 24 | 200 | 165 | 130 | 50 | 160 | M10 | 8 × 7 | 15 |
| | IEC 100-112 B5 | 28 | 250 | 215 | 180 | 60 | 160 | M12 | 8 × 7 | 15 |
| | IEC 100-112 B14 | 28 | 160 | 130 | 110 | 60 | 160 | Ø9 | 8 × 7 | 15 |
| HSA 100 | IEC 90 B5 | 24 | 200 | 165 | 130 | 50 | 160 | M10 | 8 × 7 | 15 |
| | IEC 100-112 B5 | 28 | 250 | 215 | 180 | 60 | 160 | M12 | 8 × 7 | 15 |
| | IEC 100-112 B14 | 28 | 160 | 130 | 110 | 60 | 160 | Ø9 | 8 × 7 | 15 |
| HSA 150 | IEC 100-112 B5 | 28 | 250 | 215 | 180 | 60 | 185 | M12 | 8 × 7 | 23 |
| | IEC 132 B5 | 38 | 300 | 265 | 230 | 80 | 200 | M12 | 10 × 8 | 23 |
| | IEC 132 B14 | 38 | 200 | 165 | 130 | 80 | 200 | Ø11 | 10 × 8 | 23 |
| HSA 200 | IEC 132 B5 | 38 | 300 | 265 | 230 | 80 | 250 | M12 | 10 × 8 | 25 |
| | IEC 160 B5 | 42 | 250 | 300 | 250 | 110 | 250 | M16 | 12 × 8 | 25 |

Dimensions in mm

## 3.3 / Input shaft

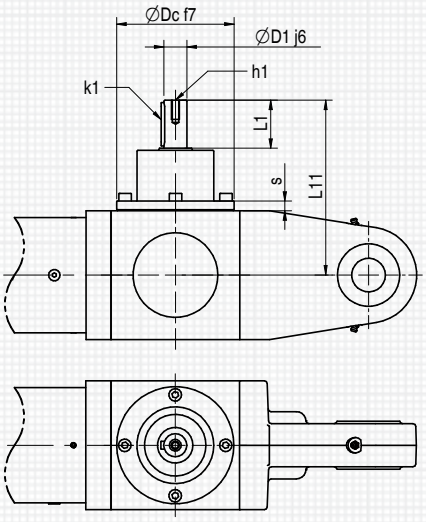


**Solid shaft with key, standard diameter**

**Ordering code:** S

| SIZE | ØD1 | L1 | L11 | ØDc | h1 | k1 | s |
|---|---|---|---|---|---|---|---|
| HSA 10 | 16 | 30 | 116 | 84 | M6 depth 12 | 5×5×25 | 10 |
| HSA 25 | 20 | 40 | 150 | 100 | M8 depth 20 | 6×6×35 | 8 |
| HSA 50 | 24 | 50 | 182 | 122 | M8 depth 20 | 8×7×45 | 9 |
| HSA 100 | 32 | 65 | 217 | 156 | M10 depth 25 | 10×8×60 | 11 |
| HSA 150 | 42 | 85 | 267 | 185 | M10 depth 25 | 12×8×80 | 11 |
| HSA 200 | 55 | 100 | 318 | 230 | M12 depth 25 | 16×10×90 | 11 |

Dimensions in mm

## 3.3 / Input shaft

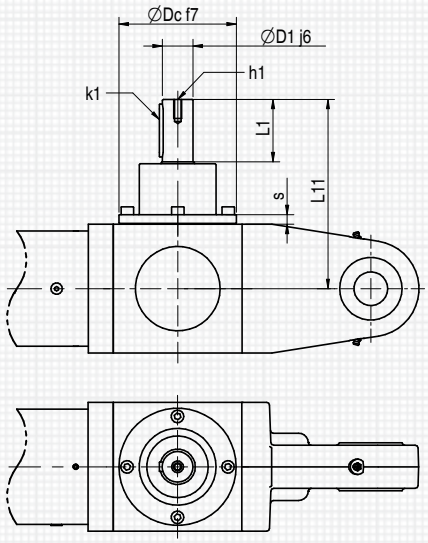


**Solid shaft with key, increased diameter**

**Ordering code:** R

| SIZE | ØD1 | L1 | L11 | ØDc | h1 | k1 | s |
|---|---|---|---|---|---|---|---|
| HSA 10 | 24 | 50 | 136 | 84 | M6 depth 12 | 8×7×40 | 10 |
| HSA 25 | 26 | 55 | 165 | 100 | M8 depth 20 | 8×7×45 | 8 |
| HSA 50 | 32 | 65 | 197 | 122 | M8 depth 20 | 10×8×55 | 9 |
| HSA 100 | 45 | 90 | 242 | 156 | M10 depth 25 | 14×9×80 | 11 |
| HSA 150 | 55 | 110 | 292 | 185 | M10 depth 25 | 16×10×100 | 11 |
| HSA 200 | 70 | 140 | 358 | 230 | M12 depth 25 | 20×12×120 | 11 |

Dimensions in mm

## 3.4 / Additional output shaft

HSA actuators can be equipped with one or more additional output shafts.

Available options are:

- Code **S**: solid shaft with key, standard diameter
- Code **R**: solid shaft with key, increased diameter

The position of the shafts refers to the main input shaft and is expressed as an angle with a positive counter-clockwise direction and with the actuator seen from above (rod end side).

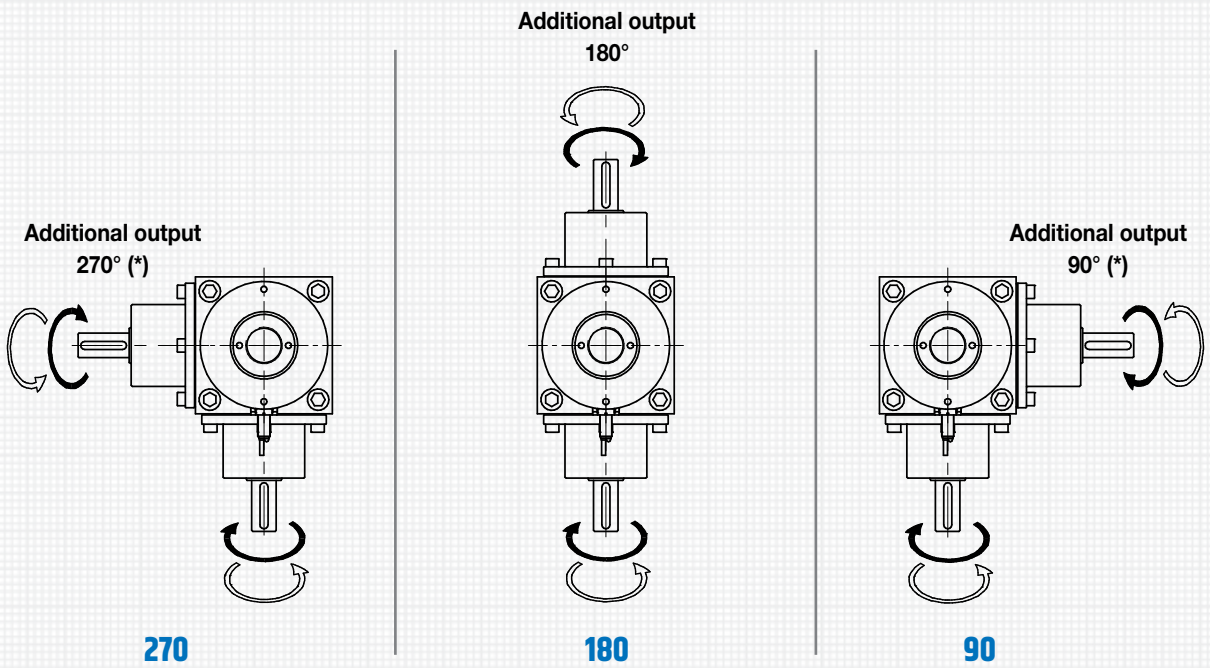


**Ordering code:**

| S | 180 |
|---|---|
| 1 | 2 |

**1. Shaft code**
**2. Shaft position**

**ATTENTION:** The rotational speed of the additional output shaft is always equal to the rotational speed of the input shaft, regardless of the reduction ratio of the actuator.

(*) – Marked combinations not available with ratio R1.

## 3.5 / Mounting position

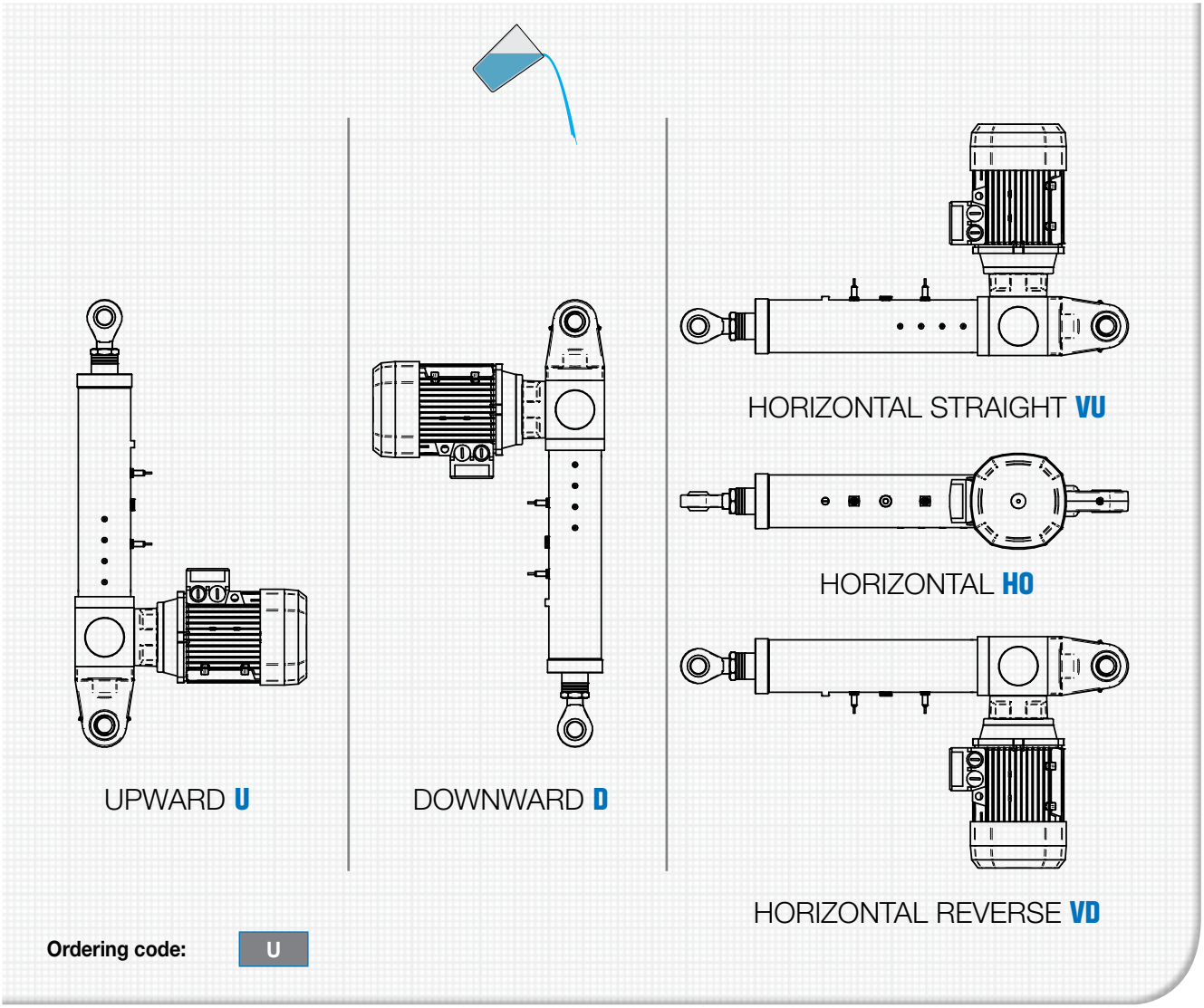


**NOTE:** in case of inclined or tilting mounting position, indicate the one among the positions shown that the closer it gets to working condition.

# 4 / Sizing and selection

## 4.1 / Input torque calculation

**Input torque due to external forces $T_e$**

$$T_e = \frac{(F_p + F_a + F_e)\, P_h}{2000\, \pi \cdot u \cdot \eta} \text{ [Nm]}$$

| | |
|---|---|
| $F_p$ | = weight (if present) |
| $F_a$ [N] | = friction force |
| $F_e$ [N] | = other external forces |
| $P_h$ [mm] | = thread helix lead of the ball screw |
| $u$ | = ratio of the actuator |
| $\eta$ | = total efficiency of the actuator |

**Total input torque $T_M$**

$$T_M = T_e + T_a \text{ [Nm]}$$

| | |
|---|---|
| $T_a$ [Nm] | = friction torque of the actuator |

**NOTE:** the calculated value must not exceed the Max Input Torque limit $T_{max}$ reported in the technical tables (see Chapter 2.1 / Technical data HSA Series)

## 4.2 / Ball screw sizing and service life

Ball screws life corresponds to the number of revolutions that the screw can perform with regard to its nut before any sign of fatigue appears on the material of screw, nut and rolling elements.
The **nominal ball screw life** *($L_{10}$)* is calculated with the following formula:

$$L_{10} = \left(\frac{C_a}{F_m \cdot f_{sh}}\right)^3 \cdot 10^6 \text{ [rev]}$$

**$C_a$ [N]** = ball screw dynamic load
**$F_m$ [N]** = equivalent dynamic load
**$f_{sh}$** = shock factor
- **$f_{sh} = 1$** load without shocks
- **$1 < f_{sh} \leq 1.3$** load with light shocks
- **$1.3 < f_{sh} \leq 1.8$** load with medium shocks
- **$1.8 < f_{sh} \leq 3$** load with heavy shocks

The result of the calculation corresponds to the number of revolutions of the screw with regard to the nut, reached by the 90 % of the ball screws, apparently identical, subject to the same load conditions, motion laws and environment conditions.

---

The **equivalent dynamic load** *($F_m$)* is defined as a hypothetical load concentric to the screw, axial only, with constant width and direction that, if applied, would have the same effects on the ball screw life as the real applied load.
To determine it, the working cycle is divided in distinct and separate phases, each of them characterized by its load level, the specific rotating speed and the relevant time of load application.

$$F_m = \sqrt[3]{\sum_i F_i^3 \cdot \frac{v_i}{v_m} \cdot \frac{t_i}{t_{tot}}} \text{ [N]}$$

**$t_i$ [s]** = duration of the i-th phase of the cycle
**$F_i$ [N]** = load applied during the i-th phase
**$v_i$** = linear speed during the i-th phase

**$v_m$** = $\sum_i v_i \cdot \frac{t_i}{t_{tot}}$ [mm/s] = average speed

**$t_{tot}$** = $\sum_i t_i$ [s] = total cycle time

The equivalent dynamic load $F_m$ must be calculated as indicated above, where for each phase external loads, mass loads (weight and inertial) and friction loads must be considered.

---

The **service life of ball screw expressed in hours** *($L_{10h}$)* is calculated as follows:

$$L_{10h} = \frac{L_{10} \cdot P_h}{3600 \cdot v_m} \text{ [hours]}$$

The **service life of ball screw expressed in km of travel** *($L_{10km}$)* is calculated as follows:

$$L_{10km} = \left(\frac{C_a}{F_m \cdot f_{sh}}\right)^3 \cdot P_h \text{ [km]}$$

**$P_h$ [mm]** = thread helix lead

## HSA 10

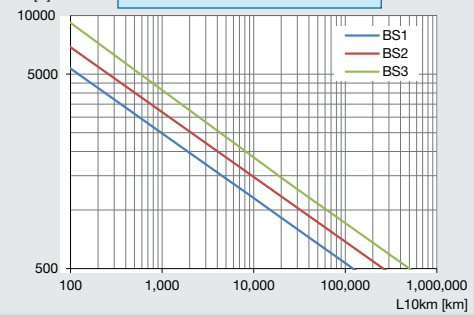


## HSA 10 BS1

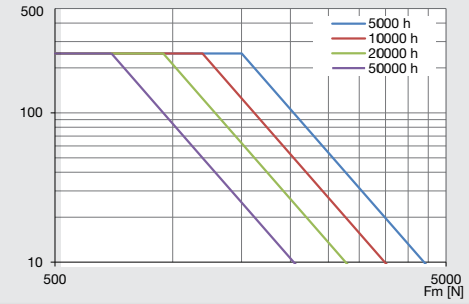


## HSA 10 BS2

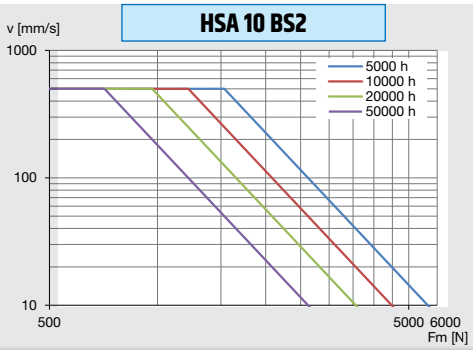


## HSA 10 BS3

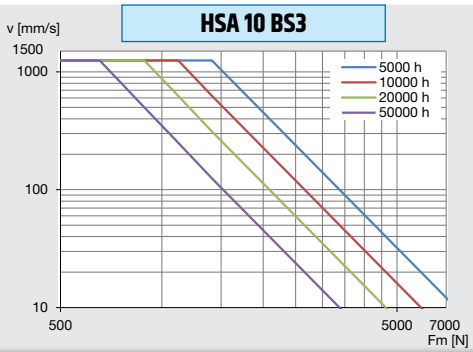


## HSA 25

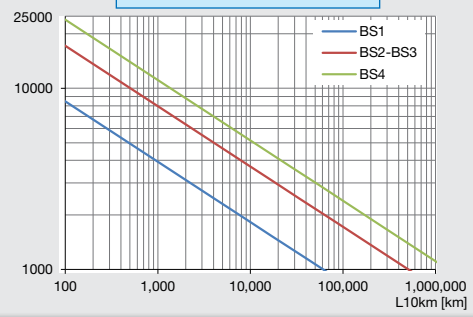


## HSA 25 BS1

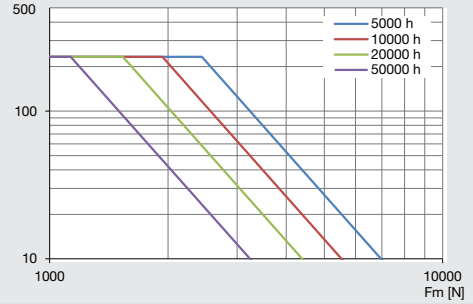


## HSA 25 BS2

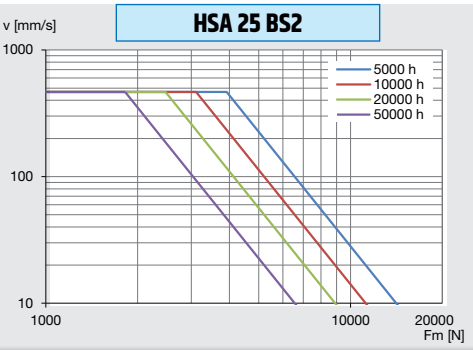


## HSA 25 BS3

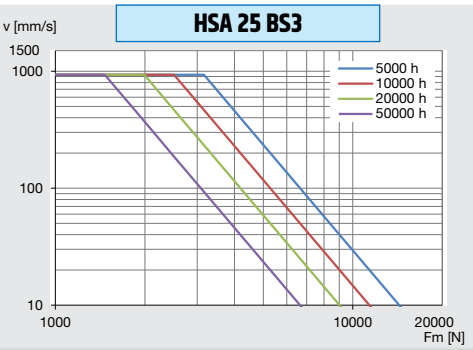


## HSA 25 BS4

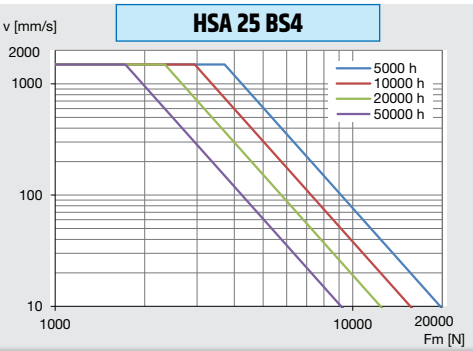

## HSA 50

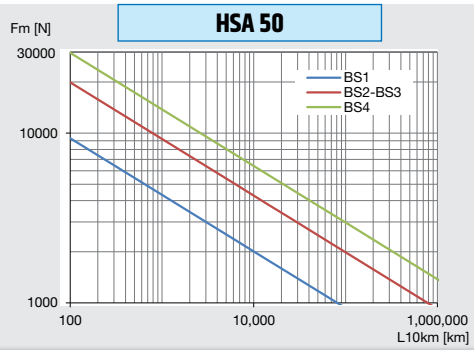


## HSA 50 BS1

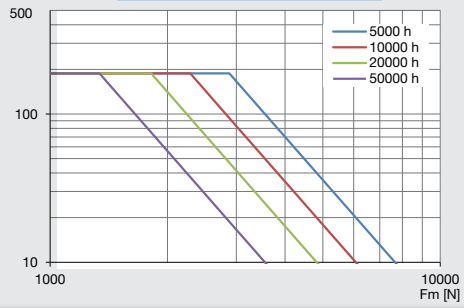


## HSA 50 BS2

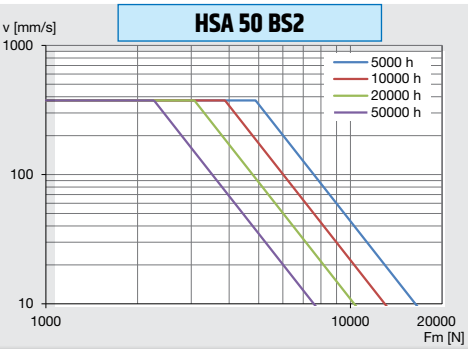


## HSA 50 BS3

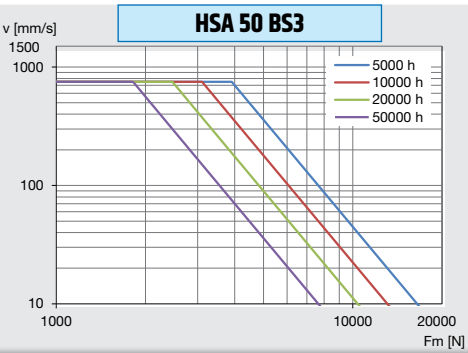


## HSA 50 BS4

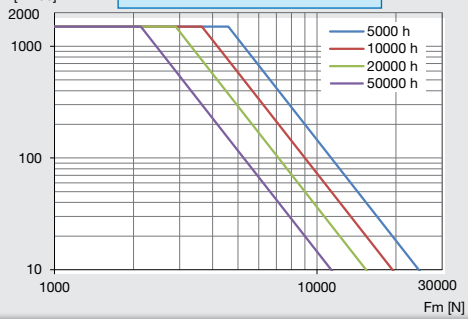


## HSA 100

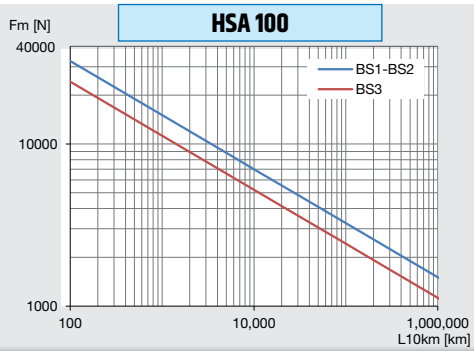


## HSA 100 BS1

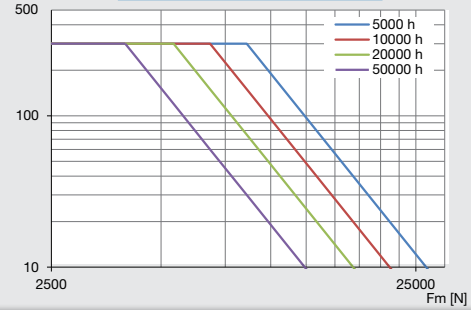


## HSA 100 BS2

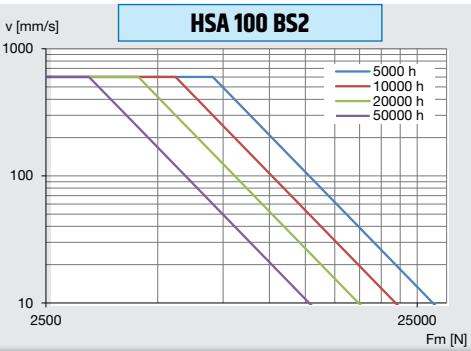


## HSA 100 BS3

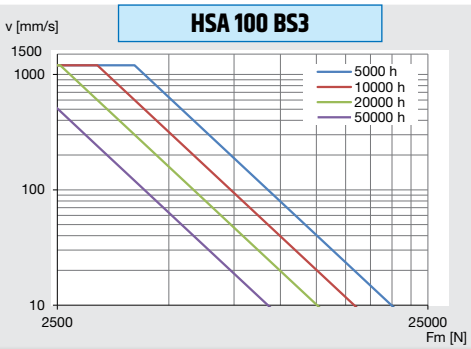

## HSA 150

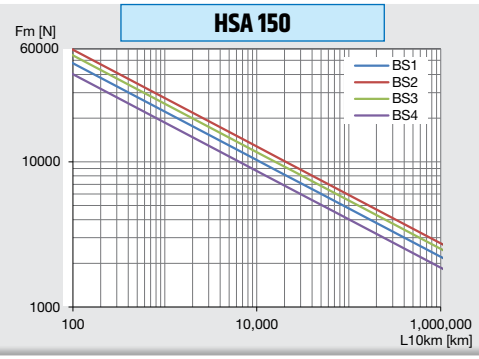


## HSA 150 BS1

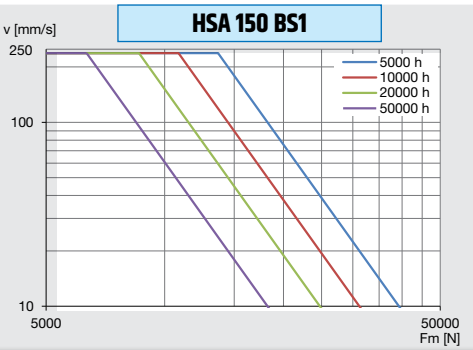


## HSA 150 BS2

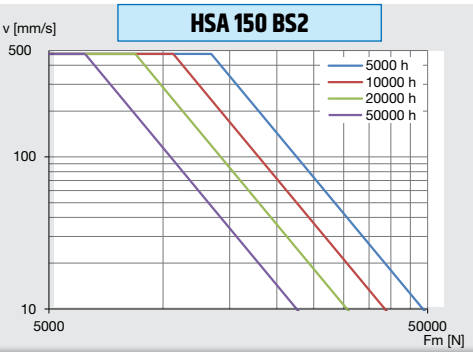


## HSA 150 BS3

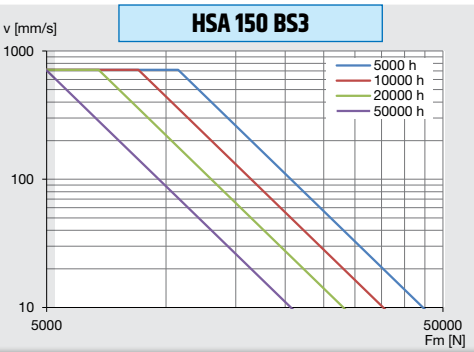


## HSA 150 BS4

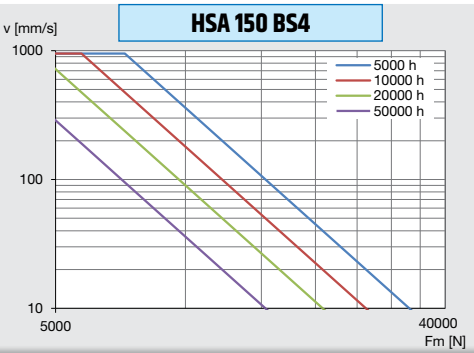


## HSA 200

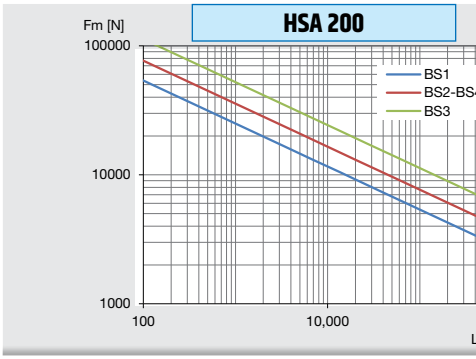


## HSA 200 BS1

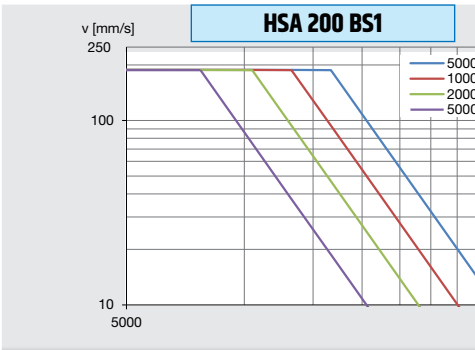


## HSA 200 BS2

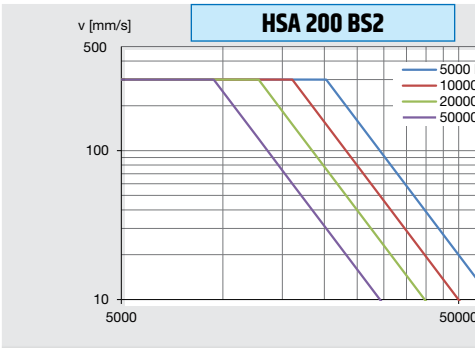


## HSA 200 BS3

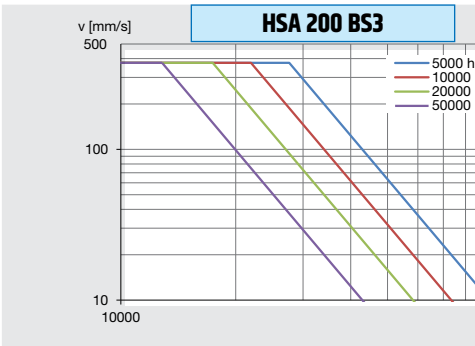


## HSA 200 BS4

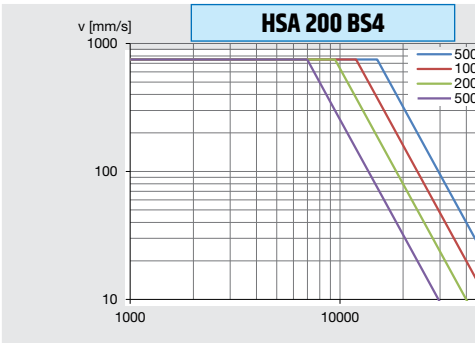

## 4.3 / Push load limit

In case of push load (static or dynamic) applied on the actuator, the buckling resistance of the screw must be checked. The maximum compression load allowed on the actuator is determined by:

$$F_{max} = \frac{6437.5 \cdot \pi^3 \cdot (d_0 - D_w)^4}{(C + x)^2 \cdot sf} \text{ [N]}$$

***$d_0$* [mm]** = ball screw nominal diameter
***$D_w$* [mm]** = balls diameter
***C* [mm]** = linear travel (stroke)
***x*** = calculation coefficient (see below table)
***sf*** = safety factor

| SIZE | HSA 10 | HSA 25 | HSA 50 | HSA 100 | HSA 150 | HSA 200 |
|---|---|---|---|---|---|---|
| Coefficient *x* | 275 | 361 | 428 | 408 | 446 | 518 |

**NOTE:** value resulting from calculation must not exceed the max force value as for technical data (see Chapter 2.1 / Technical data HSA Series).

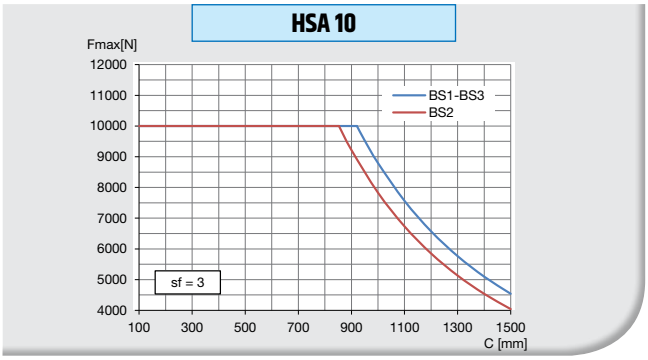


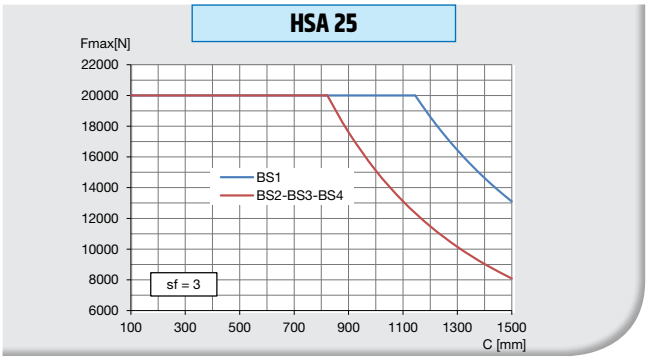


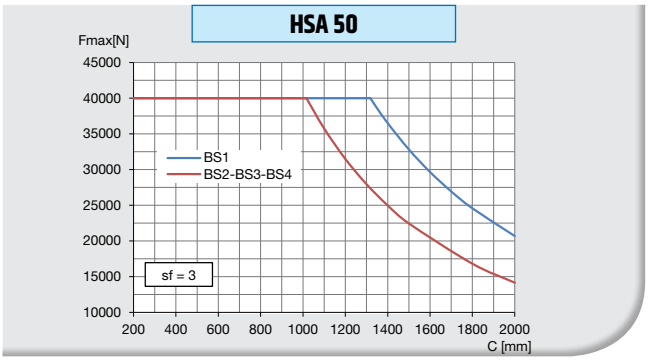


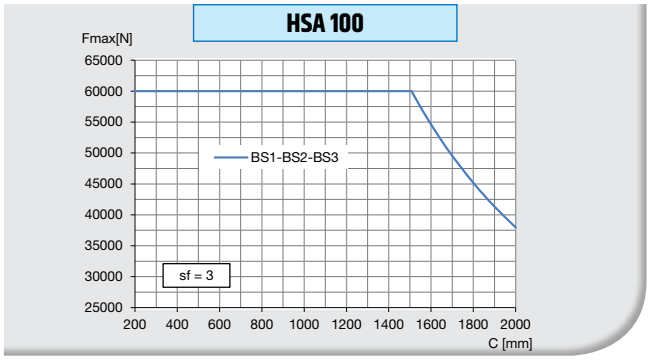


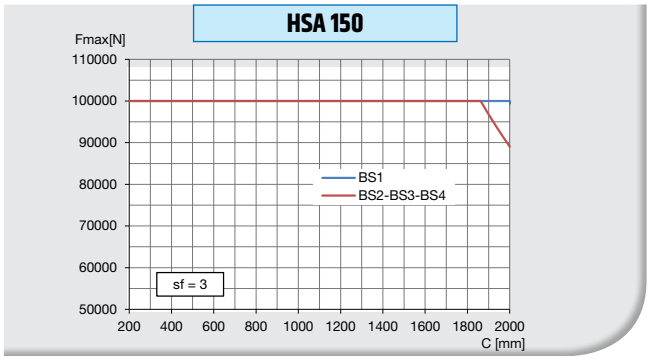


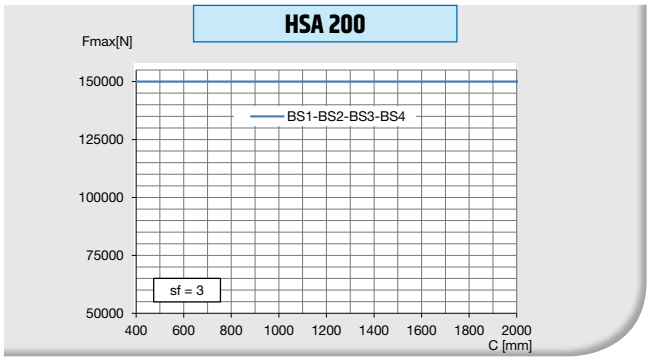

## 4.4 / Critical speed limit

The rotating speed of the screw generates the rod linear movement.
Therefore, the linear speed of the actuator, is limited by the following factors:

**A - External factors** (length, diameter and type of screw end supports).

**B - Internal factors** (balls material, geometry and material of all the recirculation elements).

Once the respective values have been established according to these two criteria, the lower of the two values is adopted as the maximum speed of the system.

**A - Limits due to external factors**
In order to ensure a proper working of the system and to prevent imbalances which could damage the ball screw, the rotating speed must not reach the critical level.
Therefore, also the linear speed must be limited to the critical value.
The critical speed depends on the screw diameter, the type of screw end support and the length of the free ball screw.
The maximum permissible linear speed is calculated according to the following formula, which limits the rotation speed to a value equal to 80% of the critical speed:

$$v_{max} = 251 \cdot 10^4 \cdot \frac{d_0 - D_w}{(C + x)^2} \cdot P_h \text{ [mm/s]}$$

**$d_0$ [mm]** = ball screw nominal diameter
**$D_w$ [mm]** = balls diameter
**$P_h$ [mm]** = thread helix lead
**$C$ [mm]** = linear travel (stroke)
**$x$** = calculation coefficient (see below table)

| SIZE | HSA 10 | HSA 25 | HSA 50 | HSA 100 | HSA 150 | HSA 200 |
|---|---|---|---|---|---|---|
| Coefficient *x* | 275 | 361 | 428 | 408 | 446 | 518 |

**B - Limits due to internal factors**
Depending on balls and screw material, geometry and material of all the recirculation elements and screw diameter, there is a specific limit of the maximum rotating speed. The values related to each actuator model and size are stated in the specific performance tables (see chapter 2.1 / Technical data HSA Series).

## HSA 10

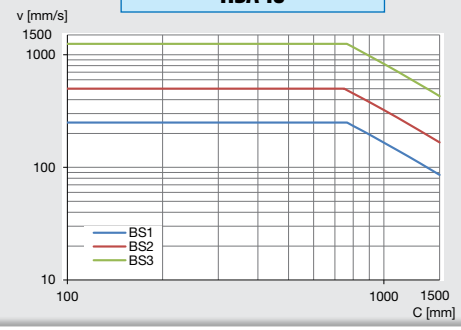


## HSA 25

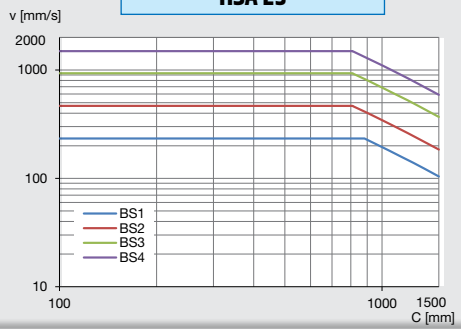


## HSA 50

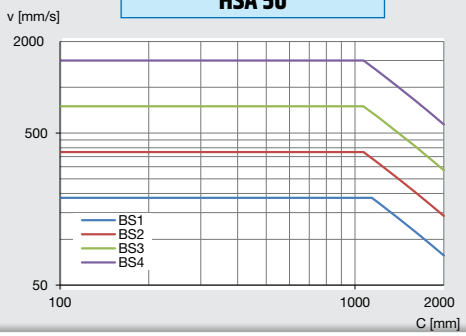


## HSA 100

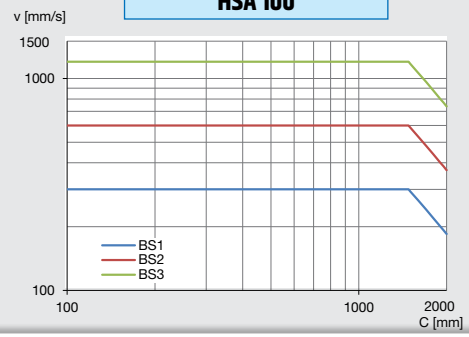


## HSA 150

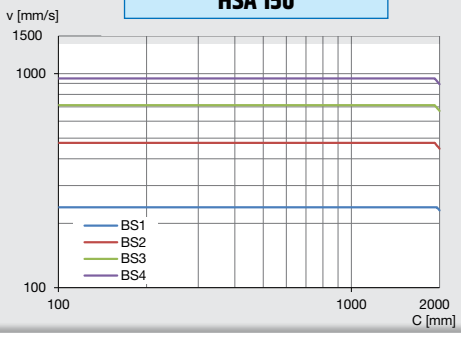


## HSA 200

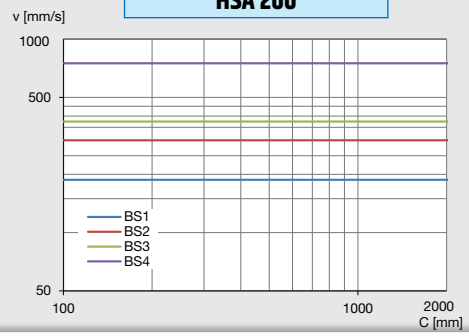

# 5 / Limit sensors

**Inductive proximity switches** allow the stroke of an actuator to be limited, preventing it from reaching the internal mechanical stop and being damaged by it. If there are intermediate sensors, they allow to identify intermediate positions along the stroke of the actuator.

The inductive proximity switches are mounted directly on the protective tube in the required position.

- Their position is fixed (not adjustable)
- The reading positions of the two limit switch sensors are the extreme limit switch positions Lc and La (see chapter 2.2 - Dimensions HSA Series).
- FC 1 – sensor for ACTUATOR RETRACTED position (Lc)
- FC 2 – sensor for ACTUATOR EXTENDED position (La)

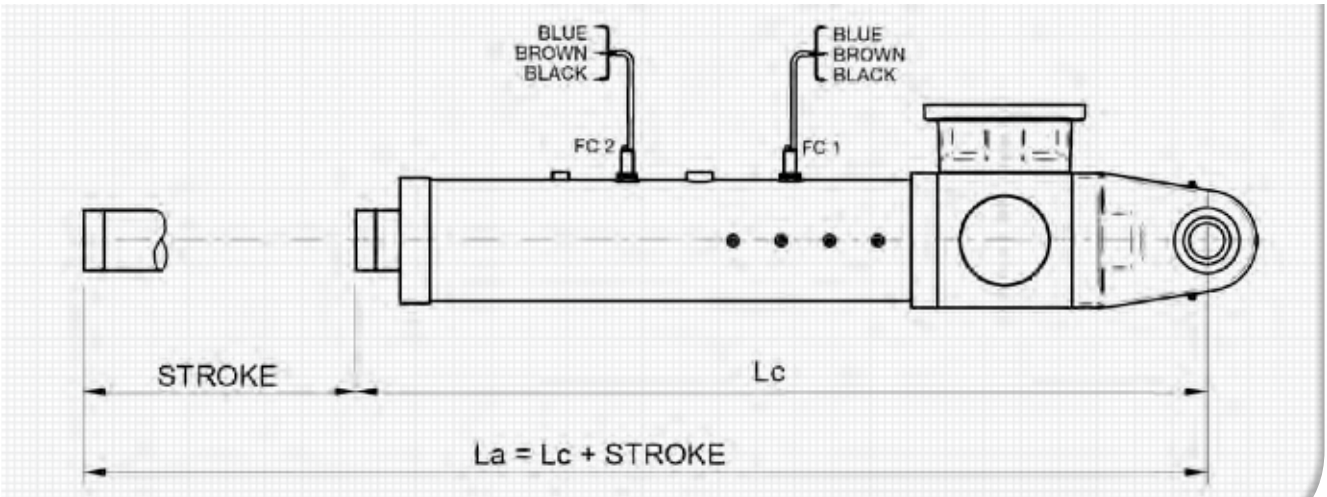


**Ordering code:** FCP

| Proximity sensors | Technical features | Control circuit |
|---|---|---|
| Contact type | NC (normally CLOSED) | 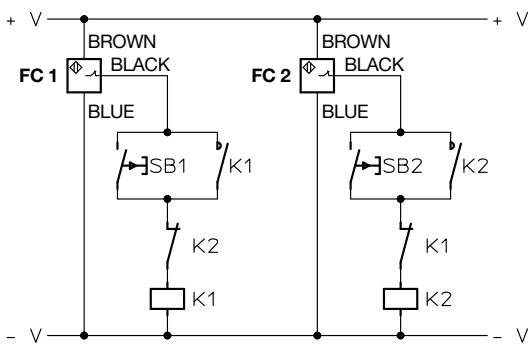 |
| Output signal | Inductive, PNP | |
| LED Signal | YES | |
| Power supply | 10÷30 Vdc | |
| Max current | 200 mA | |
| Voltage drop | < 3 V (ref. 200 mA – sensor activated) | |
| Nominal reading distance | 2 mm | |
| Degree of protection | IP67 | |
| Sensor housing material | Nickel plated brass | |
| Output cable | PVC multipole<br>3x0.2 mm$^2$ - L = 2 m | |
| Circuit | 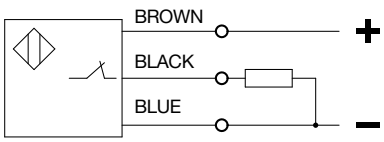 | 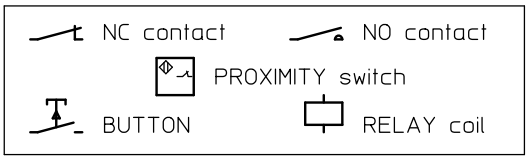 |

# 6 / Additional information

## 6.1 / Operating conditions

The normal operating conditions of the actuators are:

- Environment temperature **+0°C ÷ +40°C**
- Relative air humidity without condensation **5% ÷ 85%**
- Duty cycle **up to 100%**

For conditions of use different from normal operating conditions, please contact Servomech technical support for technical feasibility and to evaluate special configurations of the product.

## 6.2 / Relubrication and maintenance

Linear actuators HSA Series are **grease lubricated** and are supplied complete with lubricant.
The standard type of lubricants for gearbox and linear drive are suitable for the entire possible speed range of the actuators, with an ambient operating temperature of (0 ÷ 40)°C.
In case of operating temperature outside the standard range, please contact Servomech technical support to evaluate the possible use of a special lubricant.
The **gearbox is lubricated for life**.
The **linear drive must be periodically lubricated**: the lubrication interval, the quantity and type of lubricant are specified in detail in the **use and maintenance manual** supplied with the actuator.
The HSA series actuators have a **specific system for lubricating the ball nut**: to access the grease nipple located on the nut it is necessary to position the actuator at the maintenance position called LUB, which corresponds to the reading of one of the FCP limit switch sensors, to align the nut greaser with the access hole located on the external tube of the actuator.
At this point it is possible to remove the plug on the tube and place the specific greaser to grease the ball nut.

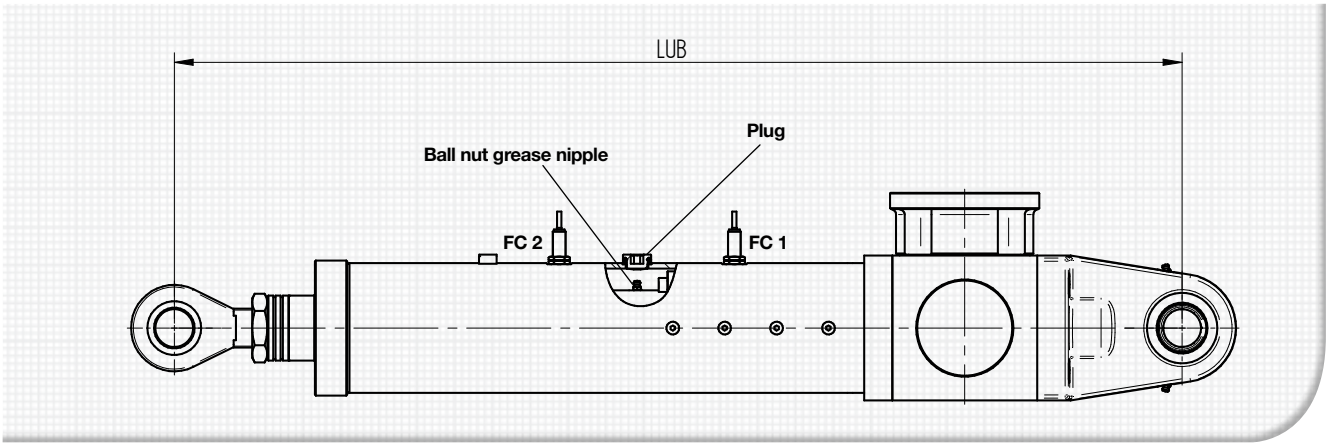


| SIZE | GEAR BOX Lubricant | LINEAR DRIVE Lubricant | LUB Quote |
|---|---|---|---|
| HSA 10 | Grease (NLGI 00 DIN 51818): AGIP Grease SLL 00 | Grease (NLGI 1 DIN 51818): LUBCON Thermoplex ALN 1001 | Lc Quote (sensor reading FC1) |
| HSA 25 | | | Lc Quote (sensor reading FC1) |
| HSA 50 | | | Lc Quote (sensor reading FC1) |
| HSA 100 | | | Lc Quote (sensor reading FC1) |
| HSA 150 | | | Lc Quote (sensor reading FC1) |
| HSA 200 | | | La Quote (sensor reading FC2) |

## 6.3 / Product identification

Each SERVOMECH product is uniquely identified and supplied with an identification plate, shown in the figure below, which allows its identification and provides technical information on the product.

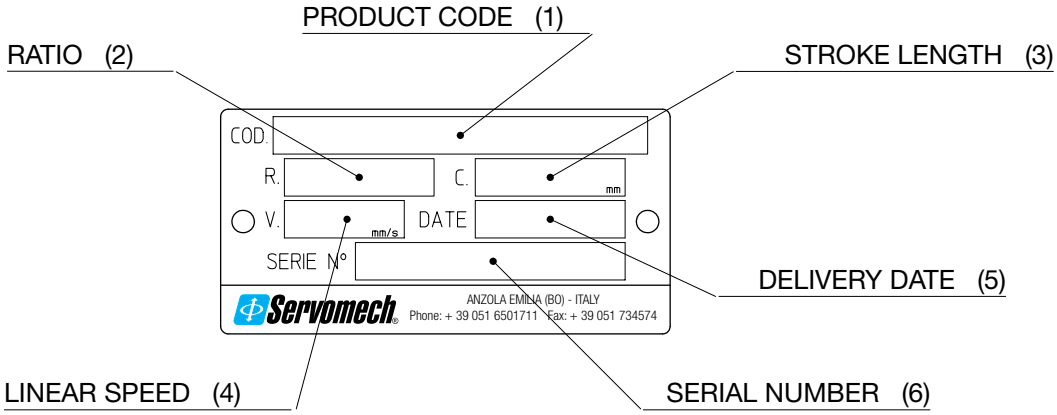


1) **Product code**: is an alphanumeric code stating the series, size, ratio, version and stroke limit device of the product.

2) **Ratio**: is the ratio of the worm gear.

3) **Stroke length**: is the stroke length in millimetres achievable by the product.

4) **Linear speed**: is the linear speed in mm/sec for products supplied with an electric motor; if the motor is not supplied, this field is blank.

5) **Delivery date**: is the assembly date, expressed in week/year (ex.: 37/23 = week 37 / year 2023) which usually is also the delivery date; this date is considered as a reference for the duration of the guarantee.

6) **Serial number**: is the number referred to the unit and assures the exact identification of the product, even after long time; it must be given as reference when ordering spare parts for the unit.

## 6.4 / Delivery status of the product

The SERVOMECH linear actuators in standard execution are supplied in the set-up and finishing conditions shown below. For any special requests, please contact Servomech technical support.

- **Standard lubrication** according to the table (see chapter 6.2 / Relubrication and maintenance).
  In case of special requirements (e.g. ambient temperature, food industry, environment with the presence of ionizing radiation, an environment that requires the use of biodegradable lubricants) the most suitable lubricant for the specific environment is evaluated. For more information and for any specific request, please contact SERVOMECH technical support.
  On request, specific lubricants agreed with the customer can be applied.
- **Painting:** all the external surfaces of the actuator are painted with blue RAL 5010 paint. On request, painting can be carried out with paint and painting cycle agreed with the customer.
- **Shaft protection:** input shafts are protected with removable plastic covers or specific anti-rust products.

Installation, operation and maintenance manual available at:
**www.servomech.com/download**

# 7 / Ordering code

## / Actuators **HSA** Series

| HSA 25 | R4 | BS 2 | STD | MF (IEC 90 B14) | SCHEME 10 | - | VU | C200 | TS | FCP |
|---|---|---|---|---|---|---|---|---|---|---|
| 1 | 2 | 3 | 4 | 5 | 6 | 7 | 8 | 9 | 10 | 11 |

| | | |
|---|---|---|
| **1** | Actuator size | HSA 10, HSA 25, HSA 50, HSA 100, HSA 150, HSA200 |
| **2** | Ratio | R1, R1.5, R2, R3, R4 |
| **3** | Ball screw | BS1, BS2, BS3, BS4 |
| **4** | Mounting attachments orientation | STD, RPT |
| **5** | Input shaft / Main input | MF (IEC ____) , S, R |
| **6** | Kinematic scheme | SCHEME 10, SCHEME 20 |
| **7** | Additional output shaft and position | - ( if not present )<br>S 90, S 180, S 270,<br>R 90, R 180, R 270 |
| **8** | Mounting position | U, D, VU, VD, HO |
| **9** | Stroke | C_____ |
| **10** | Fixing accessories | - ( if not present )<br>TS, SP |
| **11** | Limit sensors | - ( if not present )<br>FCP |

Edition: PRT.01.006.ENG.01.2023-05

**SERVOMECH** SpA
Via Calari, 1 • 40011 Anzola dell'Emilia (BO) • Italy • Tel. +39.051.6501711 • sales@servomech.com
www.servomech.com

Edition: PRT.01.006.ENG.01.2023-05

Made in Italy products
100% Made in

Servomech®
new ideas in linear motion


30 LINEAR MOTION • SINCE 1989

**SERVOMECH** SpA
Via Calari, 1 • 40011 Anzola dell'Emilia (BO) • Italy • T. +39.051.6501711 • sales@servomech.com
**www.servomech.com**